Technical data sheet

Service pole, type ISS140100F

Item number: 6289050

ISS aluminium service pole with a flexible hose to the ceiling.
Set consisting of:
1 two-tube service pole with 2 flexible hoses to the ceiling
Total length: 2,300 mm

2 flexible hoses, length each 1,500 mm Ø 30 mm

2 equippable installation areas, length each 780 mm
2 covers, aluminium, length: 780 mm
The service pole has a system opening of 76.5 mm in the area for device installation and is suitable for housing of front-locking accessory mounting boxes of the series 71GD... The floor plate as a stand, type SFISSF, and the hose connection to the ceiling, type SAISSF, should be ordered separately (see articles below).

Alu Aluminium

Master data

Item number	6289050
Type	ISS140100FRW
Description 1	Service pole
Description 2	floor/ceiling with hose
Manufacturer	OBO
Dimension	2300x100x140
Colour	Pure white; RAL 9010
Material	Aluminium
Smallest sales unit	1
Unit of quantity	Piece
Weight	1100 kg
Weight unit	kg/100 pc.
CO2 Footprint (GWP) Cradle-to-Gate	136,6031 kg CO2e / 1 Piece

Technical data sheet

Service pole, type ISS140100F

Item number: 6289050

Dimensions

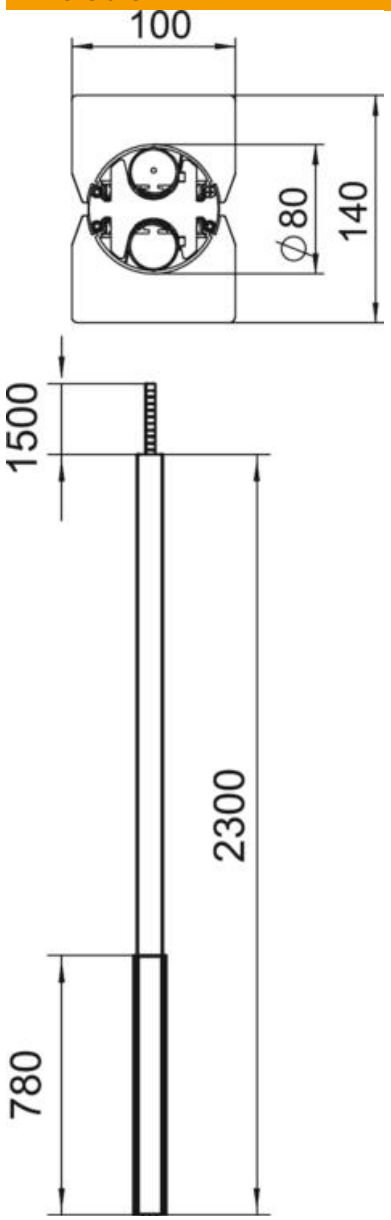

Length	2,300 mm
Width	100 mm
Height	140 mm
Dimension A	780 mm

Technical data sheet

Service pole, type ISS140100F

Item number: 6289050

Technical data

Number of usable covers	2
Number of compartments	2 St.
Version for	Double-sided
Fastening type	Stand
Floor mounting	yes
Ceiling mounting	yes
Continuous profile	no
Halogen-free	yes
Height compensation, max.	1500 mm
Height compensation, min.	0 mm
Cable entry	Top
Cover width	76.5 mm
Changes according to location	yes
Pole shape	Installation space, angular/pole, round
Pole height, max.	3800 mm
Pole height, min.	2300 mm
Adjustable	yes
Pre-wired	no