Technical data sheet

Steel wire range, head plate

Item number: 1124122

Head plate for profile rail MS4141.

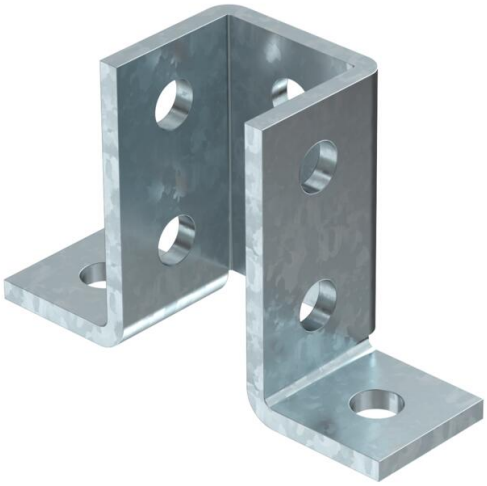

CE

St Steel

FT Hot-dip galvanised

Master data

Item number	1124122
Type	KPMS 8 FT
Description 1	Head plate
Description 2	connection element
Manufacturer	OBO
Dimension	137x41x198mm
Material	Steel
Surface	Hot-dip galvanised
Surface standard	DIN EN ISO 1461
Smallest sales unit	1
Unit of quantity	Piece
Weight	50 kg
Weight unit	kg/100 pc.

Technical data sheet

Steel wire range, head plate

Item number: 1124122

Dimensions

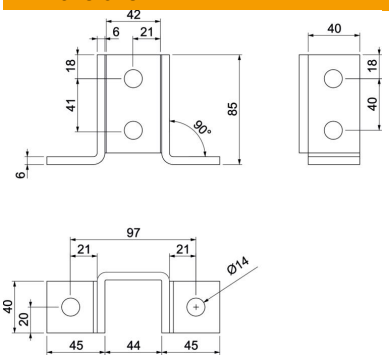

Technical data

ROHS-conformant	yes